1.

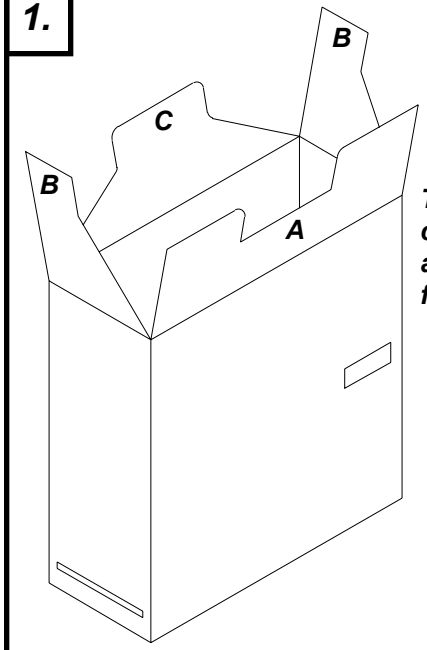

Turn label container over and align the flaps as shown.

2.

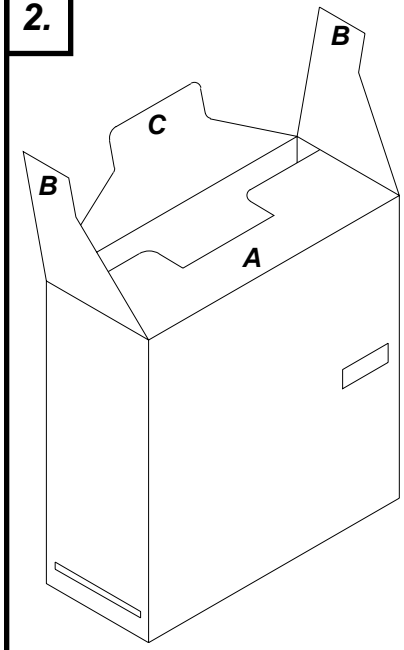

Fold flap A down into place.

3.

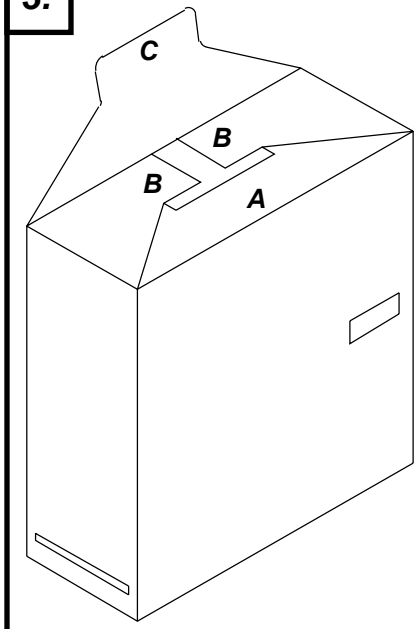

With flap A folded down in place, fold over both of the B flaps.

4.

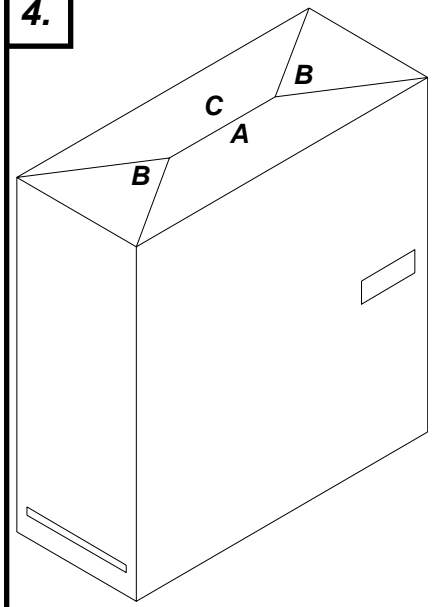

Finally fold over flap C and push in to tuck into open slot. Reach in from the top of the box and push the flaps down flat to lock.

5.

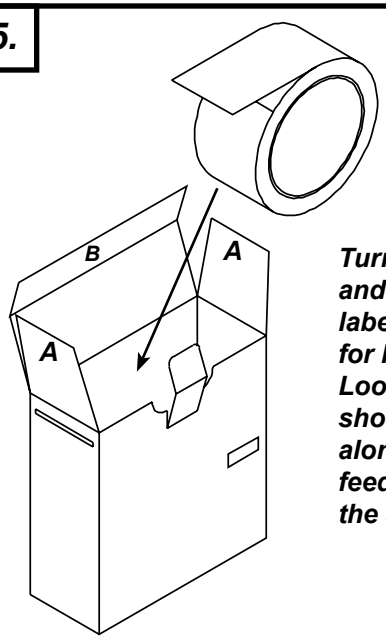

Turn container over and insert roll of labels (click here for label details). Loose end of roll should face the slot along the side and feed labels through the slot.

6.

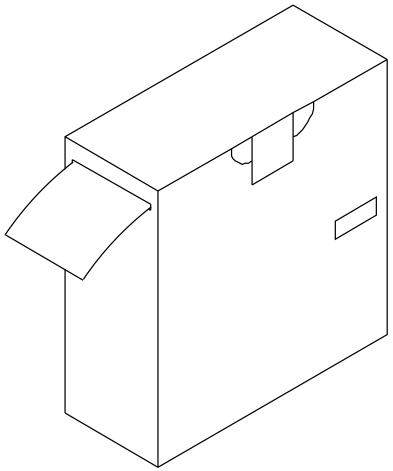

Fold over both of the A flaps. Tuck in flap B and close with locking tab

Made in the United States of America

DESCO

DRAWING NUMBER	DATE
06767 Assembly	September 2014

©2014 DESCO INDUSTR ES INC.
Employee Owned